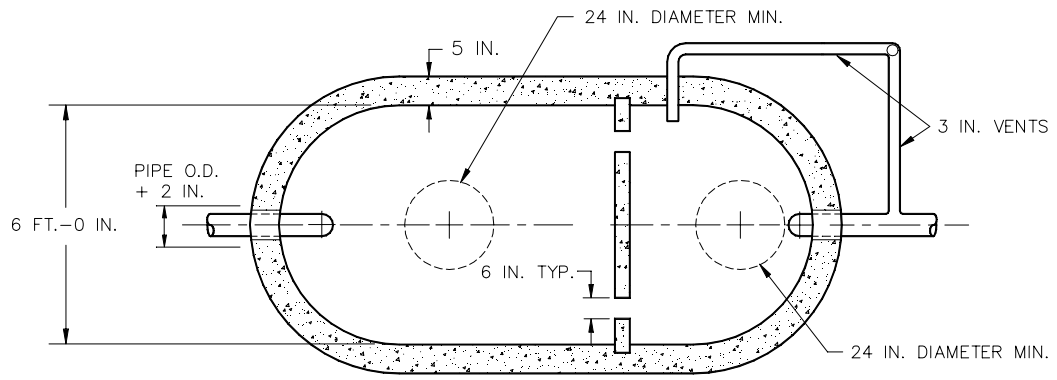

PLAN VIEW

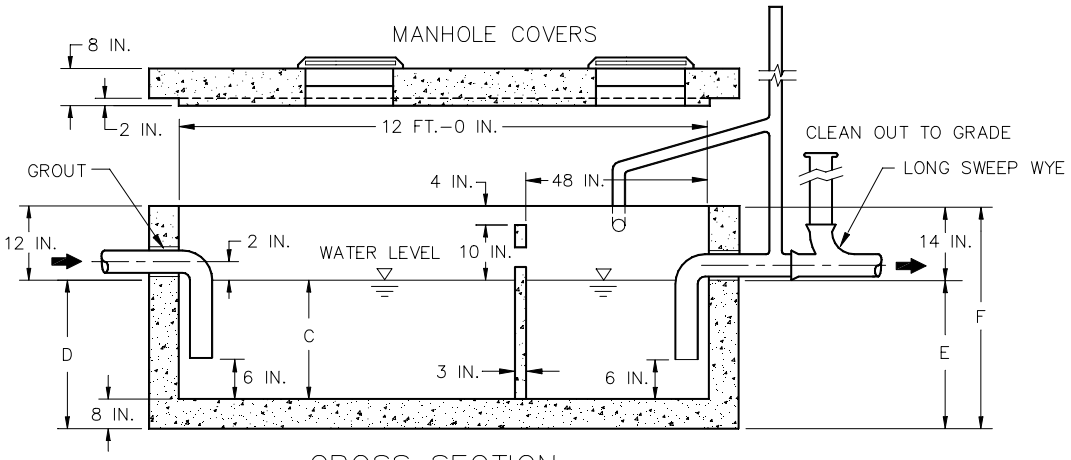

CROSS SECTION

NOTES:

1. SECONDARY COMPARTMENT HAS VOLUME EQUAL TO 1/3 OF TOTAL CAPACITY.
2. ALL PIPE AND FITTINGS TO BE CAST IRON, MIN. 3 IN. DIAMETER.
3. WALLS AND BOTTOM REINFORCED THROUGHOUT WITH 2 x 16 6/10 REMESH.
4. COVERS TO BE REINFORCED LONGITUDINALLY WITH NO. 6 REBAR ON 6 IN. CENTERS, NO. 4 REBAR ON 6 IN. CENTERS WIDTHWISE, AND NO. 8 REBAR DIAGONALLY AROUND ACCESS HOLES.
5. CLEAN OUT SHALL BE IRON BODY FERRULE WITH BRASS SCREW PLUG.
6. VENT PIPE SHALL BE CAST IRON TO A POINT 6 INCHES ABOVE THE GROUND LEVEL.
7. CHECK WITH SUPPLIER FOR EXACT DIMENSIONS.

WATER CAPACITY (APPROX) GALLONS	DIMENSIONS (INCHES)			
	C	D	E	F
1565	40	50	48	62
1800	46	56	54	68
2035	52	62	60	74
2505	64	74	72	96
2975	76	86	84	98
3210	82	92	90	104
3445	88	98	96	110

FIGURE24.DWG

TOWN OF PONCHA SPRINGS, COLORADO

FIGURE 24
TYPE B SAND AND OIL INTERCEPTOR